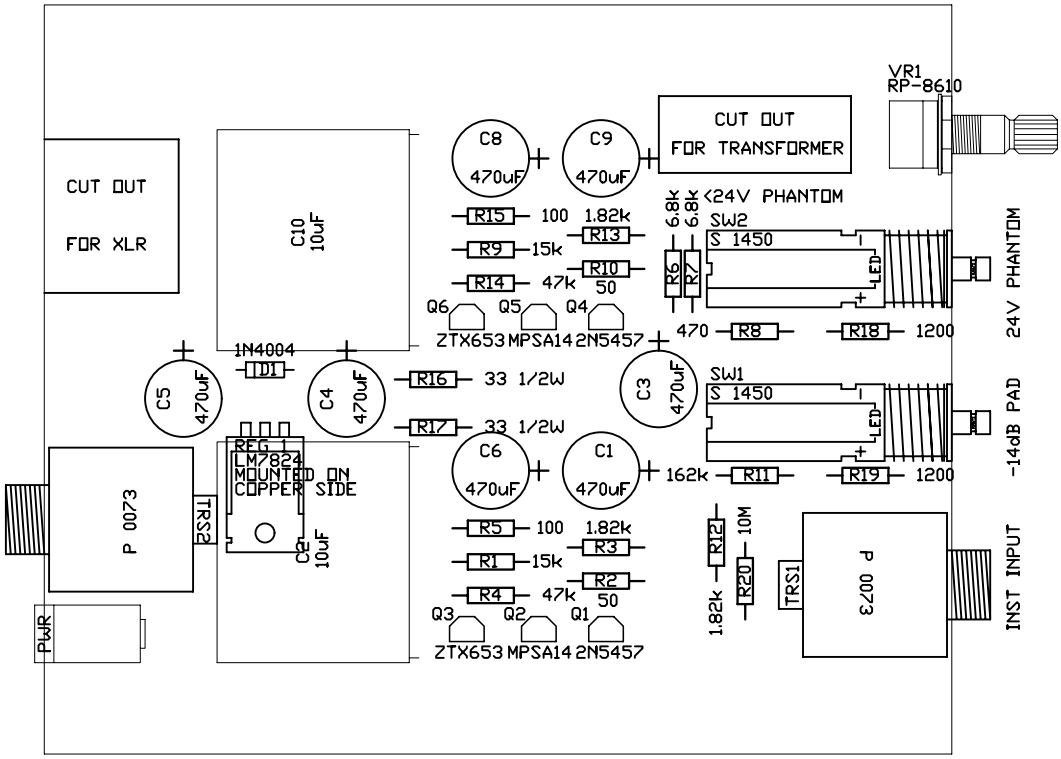
CUT OUT
FOR XLR
C10
10uF
C8
470uF
C9
470uF
CUT OUT
FOR TRANSFORMER
VR1
RP-8610
R15
100
1.82k
R13
R9
15k
R10
50
R14
47k
Q6
Q5
Q4
ZTX653
MPSA14
2N5457
6.8k
6.8k
<24V PHANTOM
SW2
S 1450
R6
R7
LED
470
R8
R18
1200
24V PHANTOM
1N4004
D1
C5
470uF
C4
470uF
R16
33 1/2W
R17
33 1/2W
C3
470uF
SW1
S 1450
LED
REG 1
LM7824
MOUNTED ON
COPPER SIDE
C6
470uF
C1
470uF
162k
R11
R19
1200
-14dB PAD
P 0073
TRS2
C2
10uF
R5
100
1.82k
R3
R1
15k
R2
50
R4
47k
Q3
Q2
Q1
ZTX653
MPSA14
2N5457
R12
10M
1.82k
R20
TRS1
P 0073
INST INPUT
PWR