Internal supply from a singel 24V AC adapter

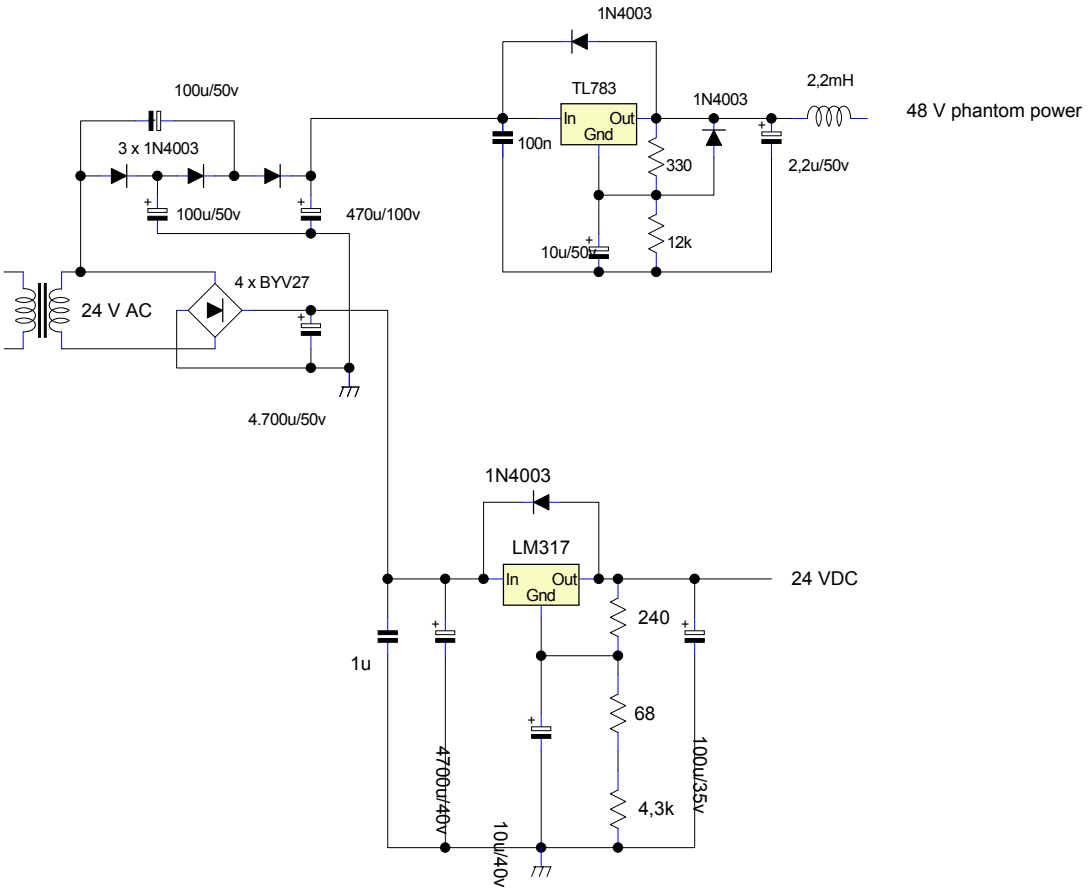

Power supply for Neve Clones